Technical data	
MODEL	DGH-100AB5-0000
Brake source :(Pneumatic :5kg/cm²)	NO
Spindle type	Flange type, spindle ø115$^{-0.01}_{-0.03}$ X10.5L, hole ø70$^{+0.013}_{0}$ X8L
Spindle hole	ø30(through hole)
Cooling	Liquid cooling (prepared by machine makers)
Spindle amplitude	0.003mm
continuous r.p.m	75rpm
Max. speed (1sec)	200rpm

MODEL	Encoder			
	Communication protocol	RESOLUTION	Indexing Accuracy	Repeatability
DGH-100AB5-HE12	EnDAT 2.2/22	25bit	±25Arc.Sec.	Within 10Arc.Sec.
DGH-100AB5-RBGD	BISS-C	26bit	±20Arc.Sec.	Within 10Arc.Sec.
DGH-100AB5-NNK3	NIKON Serial abs interface	22bit	±20Arc.Sec.	Within 15Arc.Sec.

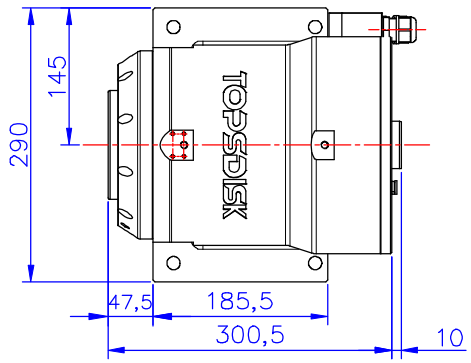

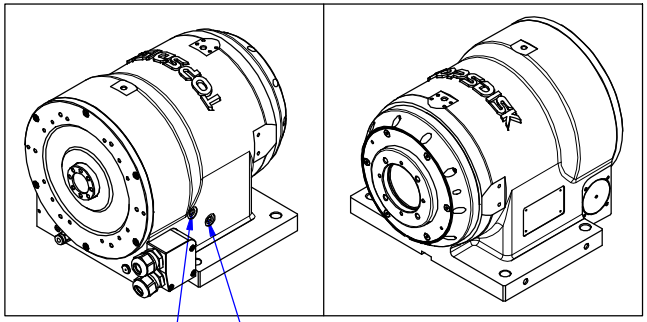

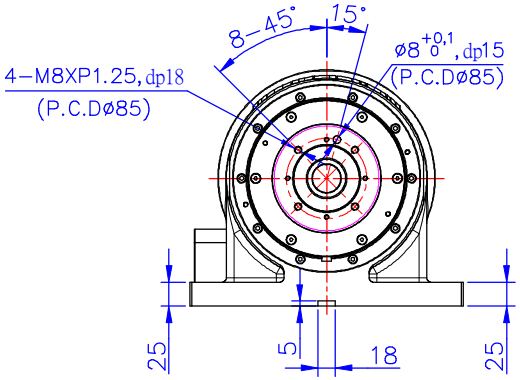

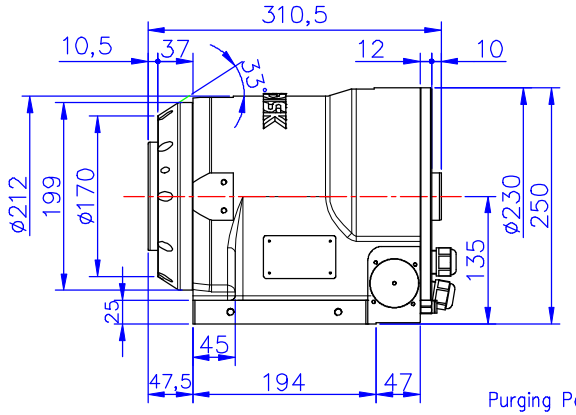

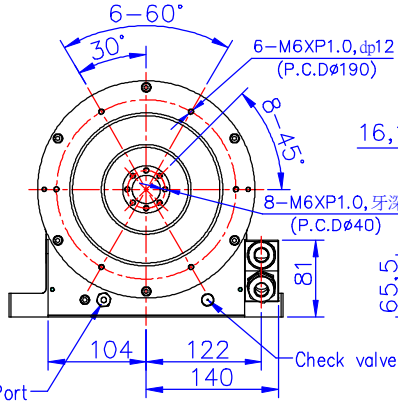

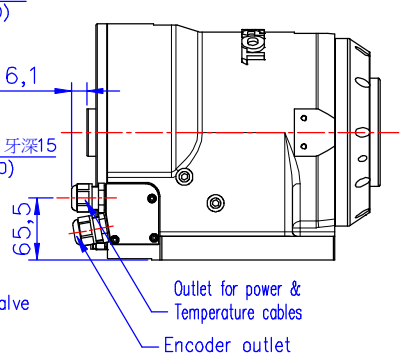

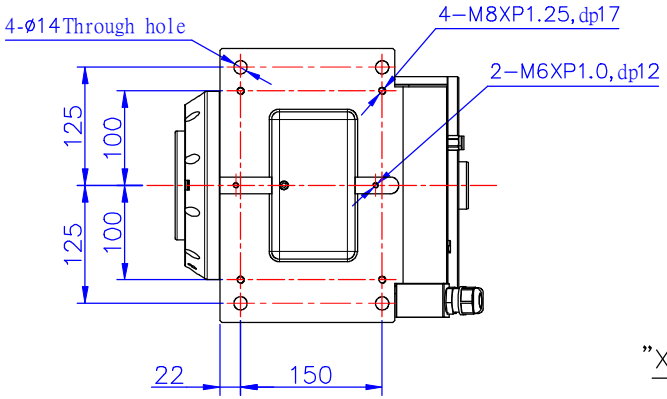

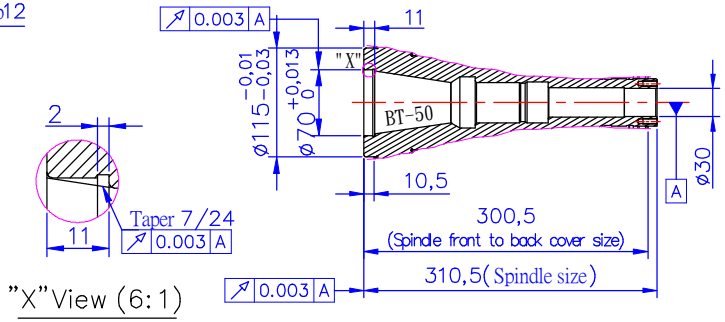

Spindle aperture (OTT (BT50) + W25 interface)

1			VERSION	UNIT	PROJECTION		SCALE	DRG. No.	DGH-100AB5-0000	Designed	2017.10.13
NO	REASONS FOR REVISION	CORRECTION DATE	2.2	mm		Frame	8 : 1	NAME	DD Rotating Spindle	SPINTOP MACHINERY CO.,LTD. 芳嘉天碟 TOPSDISK TEL:(04)25682975	
						Drawing	1 : 1				